Road Transport Department of Malaysia (JPJ)
Automotive Engineering Division,
Level 4, No.26,
Tun Hussein Road, Precinct 4,
Federal Government Administrative Office,
62100 Putrajaya, Malaysia.
Office : +603 - 8892 8107
Fax : +603 - 8881 1085
Email : ka.hq@jpj.gov.my
Web : www.jpj.gov.my

THE MALAYSIAN TYPE APPROVAL AUTHORITY

E52

COMMUNICATION CONCERNING

- APPROVAL GRANTED
- ~~APPROVAL EXTENDED~~
- ~~APPROVAL REFUSED~~
- ~~APPROVAL WITHDRAWN~~
- ~~PRODUCTION DEFINITELY DISCONTINUED~~

OF A SEAT TYPE OR TYPES WITH REGARD TO ITS (THEIR) STRENGTH PURSUANT TO REGULATION NUMBER 80

Approval number: E52*80R03/03*0016*00

1.	Trade name or mark of the seat	: DAMRONGSILP
2.	Seat type	: UNIVERSE 550 DOUBLE
3.	Manufacturer's name and address	: Damrongsilp Supplies Co., Ltd. 95 Moo.1 Malaiman Road, T.Thungcok, A.Songpheenong Suphanburi 72110, Thailand
4.	If applicable, name and address of the manufacturer's representative	: Not applicable
5.	Additional information	
5.1.	Brief description of the seat type, its attachment fittings and its adjustment, displacement and locking systems including the minimum distance between fitting points	: Drawing 1

17 JUL 2013
Malaysia Approval Authority

5.2.	Position and arrangement of seats	: Double Seat facing forward
5.3.	Seats, if any, which incorporate a safety belt anchorage	: Double Seat
5.4.	Energy absorption test of the rear part of the seat-back	: Yes / ~~No~~
5.5.	Drawings showing the area of the rear part of the seat-back verified for energy dissipation	: Drawing 1d
5.6.	Seat approved in accordance with paragraph 5.1. of this Regulation (dynamic test)	: ~~Yes~~ / No
5.6.1.	Test 1 according to Appendix 1	: ~~Yes~~ / No
5.6.2.	Test 2 according to Appendix 1	: ~~Yes~~ / No
5.6.3.	Description of the safety-belts and anchorages used for the purpose of Test 2	: Not applicable
5.6.4.	Type of auxiliary seat used for test 2 (if different from the type of seat approved)	: Not applicable
5.7.	Seat approved in accordance with paragraph 5.1. of this Regulation (static test)	: Yes / ~~No~~
5.8.	Test according to Appendix 5	: Yes / ~~No~~
5.9.	Test according to Appendix 6	: ~~Yes~~ / No
6.	Seat submitted for approval on	: 23rd November 2019
7.	Type of device	: Not applicable
8.	Technical Service, responsible for the approval test	: TUV Rheinland Malaysia Sdn. Bhd. No. 27, Jalan Para U8/103, Metropolitan Business Park, Seksyen U8, Bukit Jelutong, 40150 Shah Alam, Selangor, Malaysia.

17 JUL 2020

Malaysia Approval Authority

Approval number: E52*80R03/03*0016*00

9.	Date of report issued by that Service	: 14th June 2020
10.	Number of report issued by that Service	: 93-R80-01915-UNI550DBL/20
11.	Approval	: granted/~~extended/refused/withdrawn~~
12.	Position of approval mark on seat	: On the seat fabric, beside the head rest area
13.	Place	: Putrajaya, Malaysia.
14.	Date	: 17th July 2020
15.	Signature	:

Ir. Mohd Yusop bin Mohamad
Deputy Director
Automotive Engineering Division

16.	The following documents, bearing the approval number shown above, are available on request	: Not applicable

17 JUL 2020
Malaysia Approval Authority

Type : **UNIVERSE 550 DOUBLE**
Manufacturer : **Damrongsilp Supplies Co.,Ltd.**

TEST REPORT

according to UNECE-Regulation

Uniform provisions concerning the approval of seats of large passenger vehicles and of these vehicles with regard to the strength of the seats and their anchorages

UNECE R80

including all amendments until

series of amendments: 03
Supplement 03

Previously granted		
UNECE - certificate	:	---

Structure of report

0. General information
1. Tested vehicle(s) / object(s)
2. Test record
3. List of Appendices
4. Statement of conformity

The Test Report shall be reproduced and published in full by the client only. It shall however be reproduced partially with the written permission of the Technical Service only.

17 JUL 2020
Malaysia Approval Authority

Type : UNIVERSE 550 DOUBLE
Manufacturer : Damrongsilp Supplies Co.,Ltd.

0. General information

0.1.	Make (trade name of the manufacturer)	:	DAMRONGSILP
0.2.	Seat Type ~~(Variant)~~	:	UNIVERSE 550 DOUBLE
0.3.	Seat for vehicle category	:	M3
0.4.	Name and address of the manufacturer	:	Damrongsilp Supplies Co., Ltd. 95 Moo.1 Malaiman Road, T.Thungcok, A.Songpheenong Suphanburi 72110, Thailand
0.5.	No. of the information folder	:	UNECE R80-UNIVERSE 550 DOUBLE
	date of issue	:	October 23, 2019
	date of last amendment	:	--

1. Tested vehicle(s) / object(s)

1.1 Description

~~Vehicle~~ / object	:	Large Passenger Seat
Commercial description	:	DAMRONGSILP
Type(s) / ~~variant(s)~~ / ~~version(s)~~	:	UNIVERSE 550 DOUBLE
Identification number	:	PA10646
Condition of ~~vehicle(s)~~ / Object(s)	:	new, ~~used, protected~~
1.2. Worst case	:	The determination of worst case scenario was done according to QMA 1.301.005, section 6.2.2.2.
1.3. Remarks	:	--

17 JUL 2020
Malaysia Approval Authority

2. Test record

2.1.	Equipment for measuring and testing	:	The test facilities / measurement equipment used were in compliance with the test requirements
2.1.1.	Specifications for the test site	:	Damrongsilp Supplies Co. Ltd Laboratory
2.1.2	Subcontracting	:	Not applicable
2.2.	Test results		
2.2.1	Test results refering to measurements	:	See Appendix 1
2.2.2	Attributive tests	:	Test was done according to UN ECE Regulation No. 80.03, Clause 5.1 Appendix 5 and 6 (static test). The strength tests were only performed for vehicle category M3.
2.2.3	Alternative test provisions	:	Not applicable
	Remarks concerning extension	:	Not applicable
2.2.4.	General requirements for all seats	:	The seat type is in compliance with the requirements of the regulation.
2.2.5.	Adjustment and displacement devices	:	The seat type is in compliance with the requirements of the regulation.
2.2.6.	Retention of the user by the seat in front	:	Not applicable
2.2.7.	Risk of injury	:	The seat type is in compliance with the requirements of the regulation. See Appendix 1.
2.2.8.	Resistance of the seat and the seat fixations	:	The seat type is in compliance with the requirements of the regulation. No parts of seat, seat fixation or, accessories a) dissolved completely b) formed sharp edges or fractures, which can cause personal injury c) abandon their locked position.
2.2.9.	Constitution of the backrest and the accessories		The seat type meets the requirements regarding the prevention of injury. No sharp edges occurred during or after the testing.

Malaysia Approval Authority

2.3.	Additional information	:	The results of the test refer exclusively to the object(s) mentioned under point 1. of this report.
	Test site	:	Damrongsilp Supplies Co. Ltd Laboratory
	Test date	:	November 23, 2019
2.4.	Remarks	:	Not applicable

3. List of Appendices

Appendix 0 : List of modifications

Appendix 1 : Test record static testing

4. Statement of conformity

The information folder mentioned under point 0.5 and the type described therein complies with the requirements in the above-mentioned on page 1.

With regard to the required level of performance to be achieved, the tested samples were representative for the type to be approved.

The tests were carried out in accordance with the relevant requirements of EN ISO/IEC 17025:2005 or EN ISO/IEC 17020:2012.

Shah Alam, June 14, 2020
ML

Manfred Lottig

17 JUL 2020
Malaysia Approval Authority

List of modifications **Appendix 0**

Correction of : - ---

Modification of : - ---

Addition of : - ---

Deletion of : - ---

Malaysia Approval Authority
17 JUL 2010

Type : **UNIVERSE 550 DOUBLE**
Manufacturer : **Damrongsilp Supplies Co.,Ltd.**

Test record static seat tests **Appendix 1**

Seat type series

Test no.	Test object / Seat type	Height of test rig [mm]		Forward movement [mm]				Remarks
		H1	H2	CR		CL		
				s1	s2	s1	s2	
1	UNIVERSE 550 DOUBLE	750	500	120	68	-	-	OK
		750	500	-	-	130	65	OK

Remark: CR = corridorside right
CL = corridorside left

Displacement requirements:

Location	Min (mm)	Max (mm)
s1	100	400
s2	50	-

17 JUL 2010
Malaysia Approval Authority

APPLICATION FOR APPROVAL

TYPE: UNIVERSE 550 DOUBLE

SEATS (LARGE PASSENGER VEHICLE)

APPLICABLE REGULATION: UNECE R80.03

APPLICATION HISTORY

Document Ref. No	Issue Date	Explanation of update	Approval No.	Approval Date
UNECE R80-UNIVERSE 550 DOUBLE	23/10/2019	Original		

17 JUL 2019
Malaysia Approval Authority

GENERAL

1.0	Trade name or mark of the seat	:	DAMRONGSILP
2.0	Seat Type	:	UNIVERSE 550 DOUBLE
2.1	Seat Variant	:	

Variant	Model code
UNIVERSE 550 DOUBLE	PA10646

2.2	Loaction of Seat marking	:	Drawing no.2
4.0	Manufacturer's name and address	:	Damrongsilp Supplies Co., Ltd. 95 Moo.1 Malaiman Road, T.Thungcok, A.Songpheenong Suphanburi 72110, Thailand
5.0	If applicable, name and address of the manufacturer's representative	:	Not applicable
6.0	Additional Information		
6.1	Brief description of the seat type, its attachment fittings and its adjustment, displacement and locking systems including the minimum distance between fitting points	:	Drawing 1
6.2	Position and arrangement of seats	:	Double Seat facing forward
6.3	Seats, if any, which incorporate a safety belt anchorage	:	Double Seat
6.4	Energy absorption test of the rear part of the seat-back	:	Yes
6.5	Drawing showing the area of the rear part of the seat-back verified for energy dissipation	:	Drawing 1d
6.6	Seat approved in accordance with paragraph 5.1. of this Regulation (dynamic test)	:	No
6.6.1	Test 1 according to Appendix 1	:	No
6.6.2	Test 2 according to Appendix 1	:	No
6.6.3	Description of the safety-belts and achorages used for the purpose of test 2	:	Not applicable
6.6.4	Type of auxiliary seat used for test 2 (if different from the type of seat approved)	:	Not applicable
6.7	Seat approved in accordance with paragraph 5.1. of this Regulation (static test)	:	Yes
6.8	Test according to Appendix 5	:	Yes
6.9	Test according to Appendix 6	:	No
7.0	Seat submitted for approval on	:	???
8.0	Type of device	:	Static pulling device

17 JUL 2019
Malaysia Approval Authority

Drawing 1 – Seat Drawing(s)

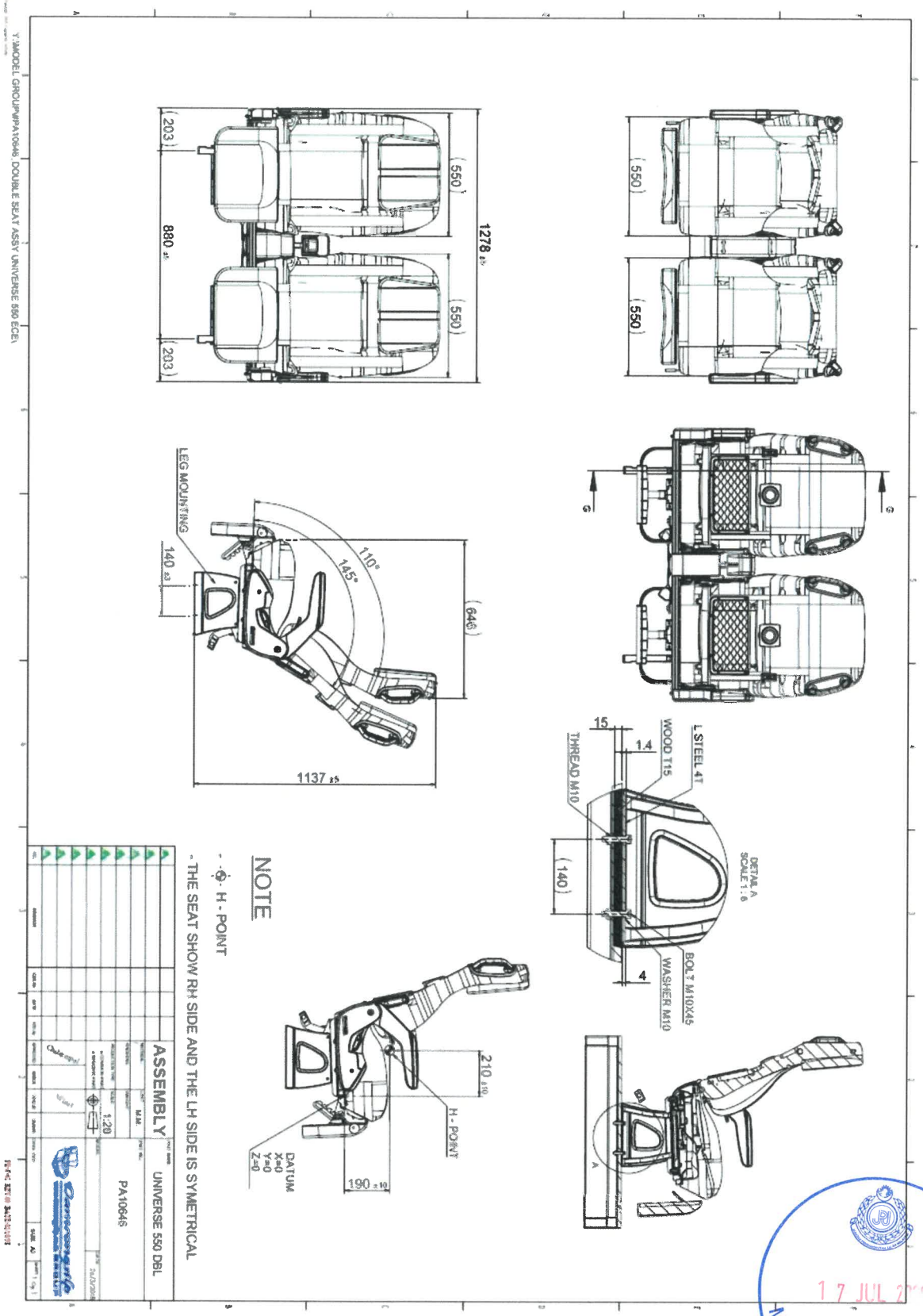

17 JUL 2019
Malaysia Approval Authority

DWG. 1a – Seat adjustment System (if applicable)

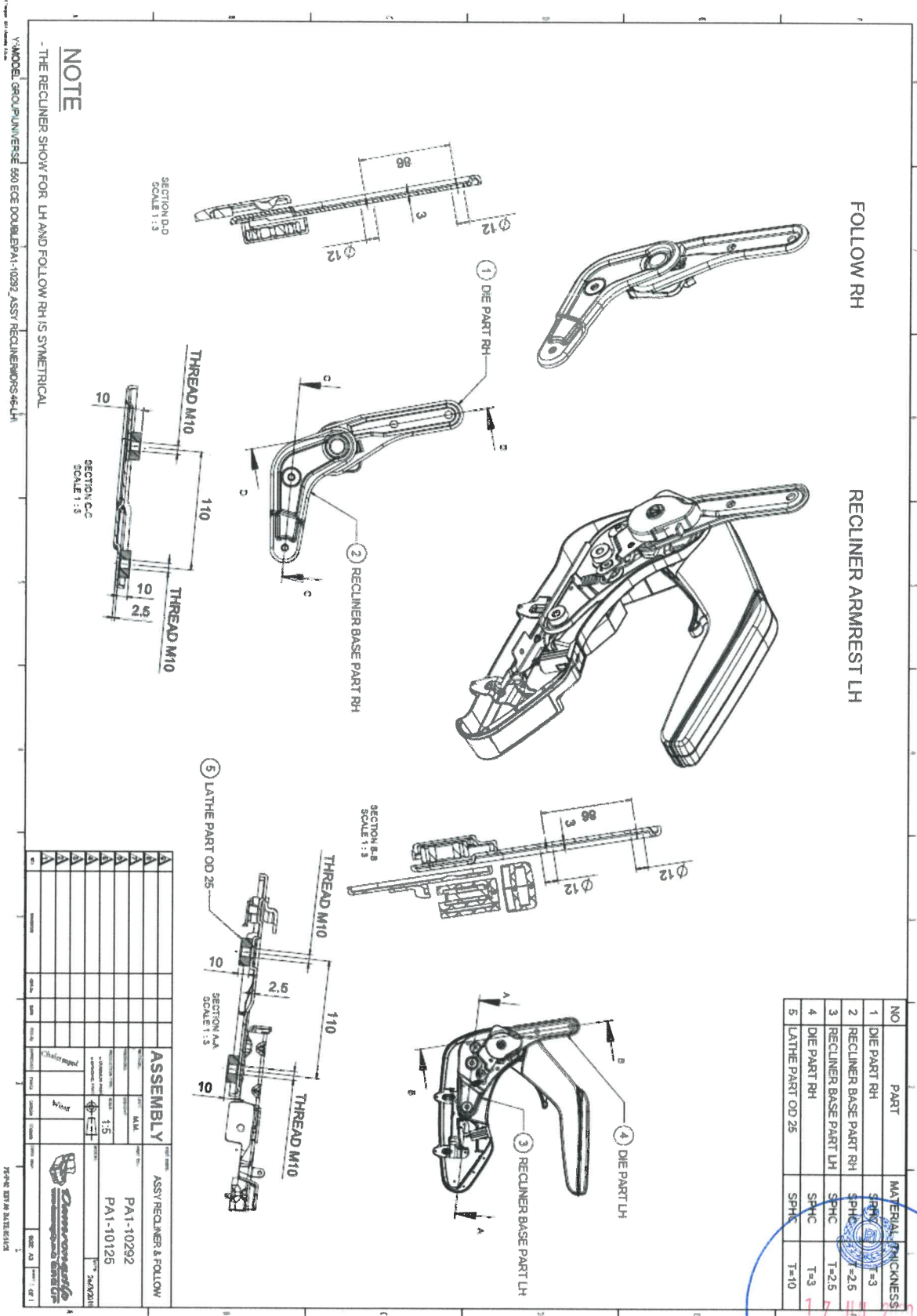

NO	PART	MATERIAL	THICKNESS
1	DIE PART RH	SPHC	T=3
2	RECLINER BASE PART RH	SPHC	T=2.5
3	RECLINER BASE PART LH	SPHC	T=2.5
4	DIE PART RH	SPHC	T=3
5	LATHE PART OD 25	SPHC	T=10

17 JUL 2019
Malaysia Approval Authority

DWG. 1b – Seat padding

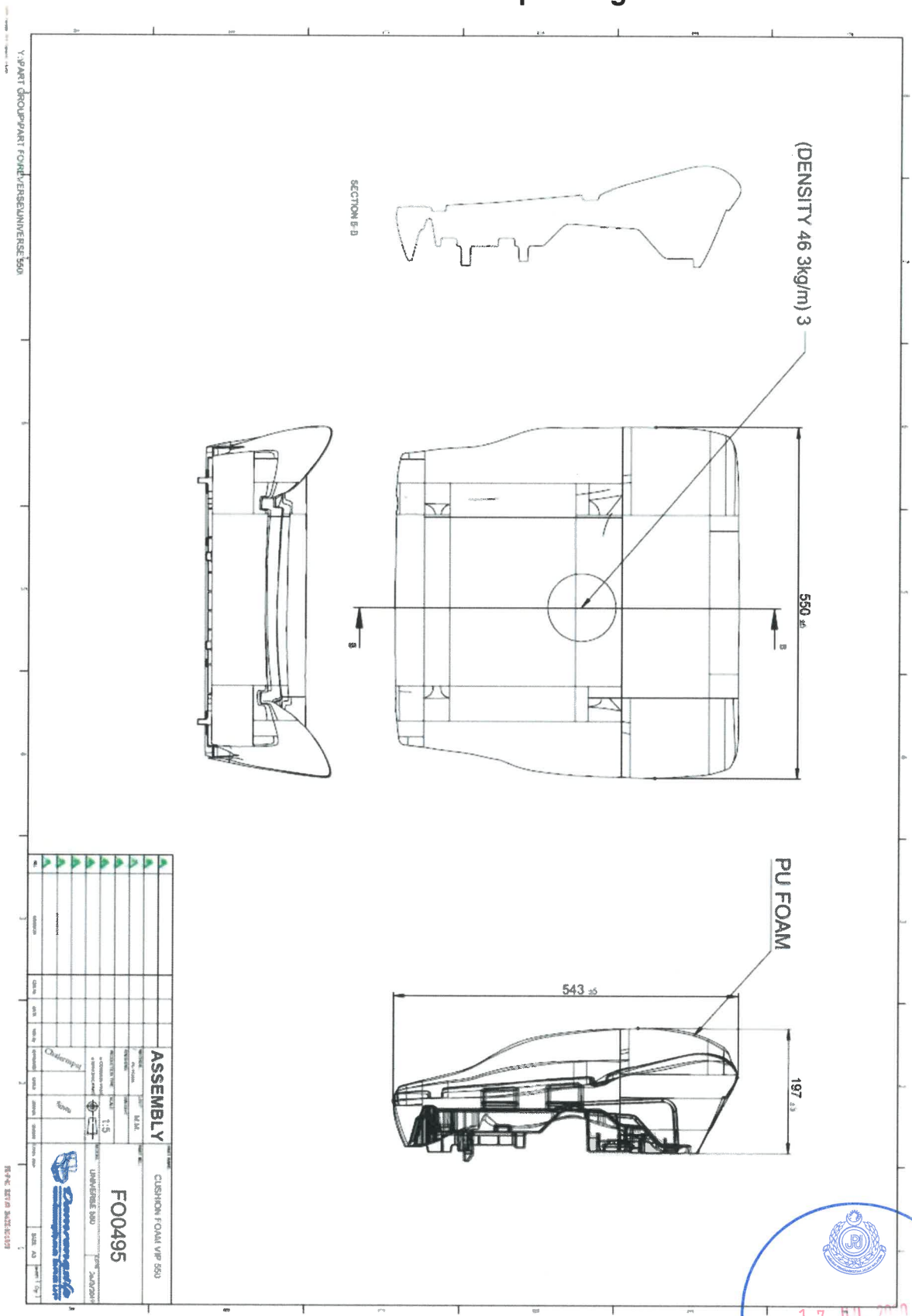

17 JUL 2019
Malaysia Approval Authority

DWG. 1c – Seat frame

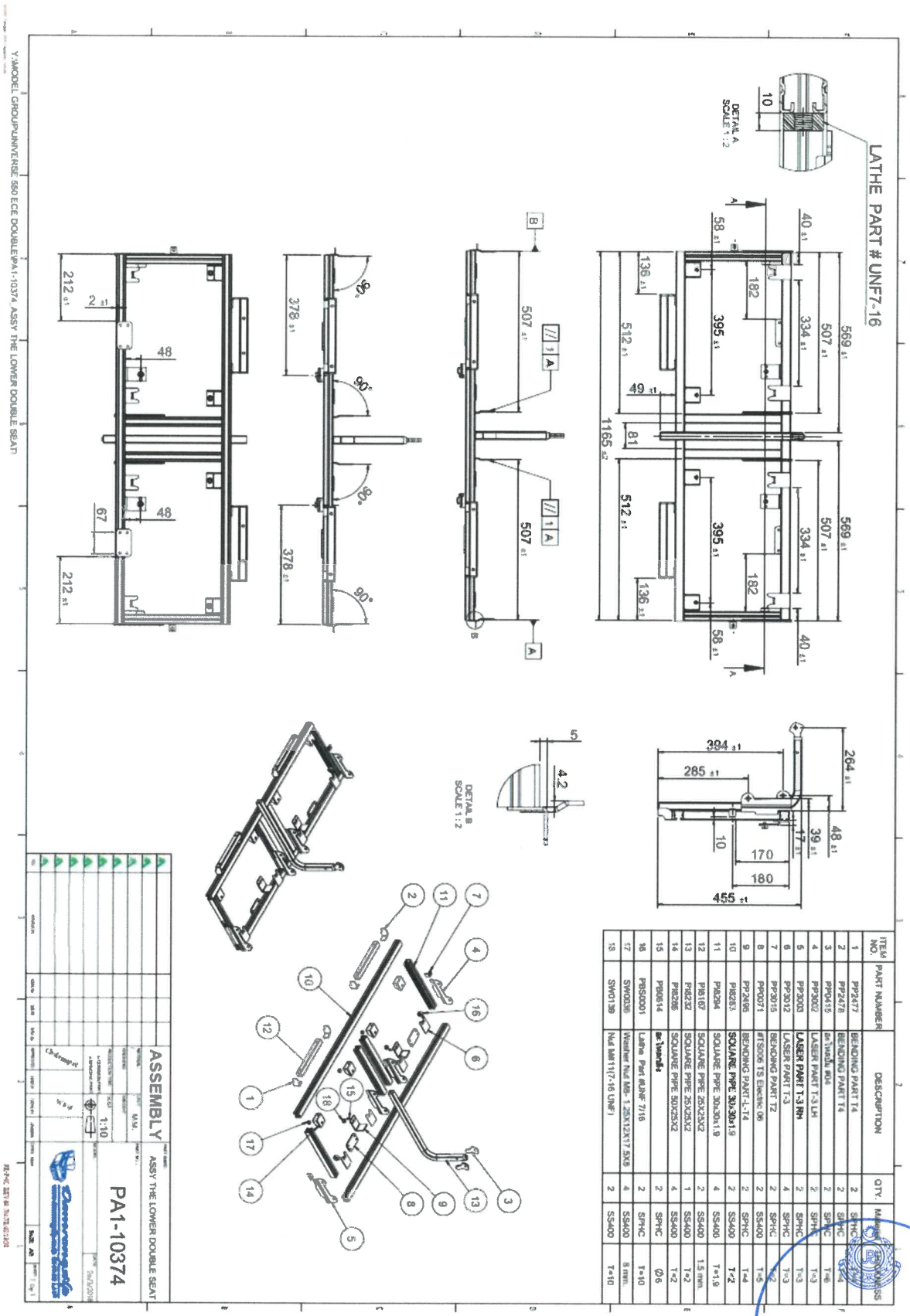

ITEM NO.	PART NUMBER	DESCRIPTION	QTY.	MATERIAL
1	PP2477	BENDING PART T4	2	SPHC
2	PP2478	BENDING PART T4	2	SPHC
3	PP0419	ลิงก์ตัวล็อค #04	2	SPHC
4	PP3002	LASER PART T-3 LH	2	SPHC
5	PP3003	LASER PART T-3 RH	2	SPHC
6	PP3012	LASER PART T-3	4	SPHC
7	PP3015	BENDING PART T2	2	SPHC
8	PP0071	#TS006 TS Electric 06	2	SS400
9	PP2496	BENDING PART-L-T4	2	SPHC
10	PB2263	SQUARE PIPE 30x30x1.9	2	SS400
11	PB2264	SQUARE PIPE 30x30x1.9	4	SS400
12	PB167	SQUARE PIPE 25X25X2	2	SS400
13	PB2232	SQUARE PIPE 25X25X2	1	SS400
14	PB2265	SQUARE PIPE 50X25X2	4	SS400
15	PB0014	ลายเกลียว	2	SPHC
16	PBS0001	Lathe Part #UNF 7/16	2	SPHC
17	SW0036	Washer Nut M8-1.25X12X17.5X8	4	SS400
18	SW0139	Nut M8(1)7-16 UNF1	2	SS400

17 JUL 2019
Malaysia Approval Authority

ITEM NO.	PART NUMBER	DESCRIPTION	QTY.	Material	THICKNESS
1	PI8170	SQUARE PIPE 25X25X1.5	1	SS400	1.5 mm.
2	PI8171	SQUARE PIPE 25X25X1.5	1	SS400	1.5mm.
3	PP2899	BENDING PART-L-T4	1	SPHC	3 mm.
4	PP3071	BENDING PART T4 RH	1	SPHC	4 mm.

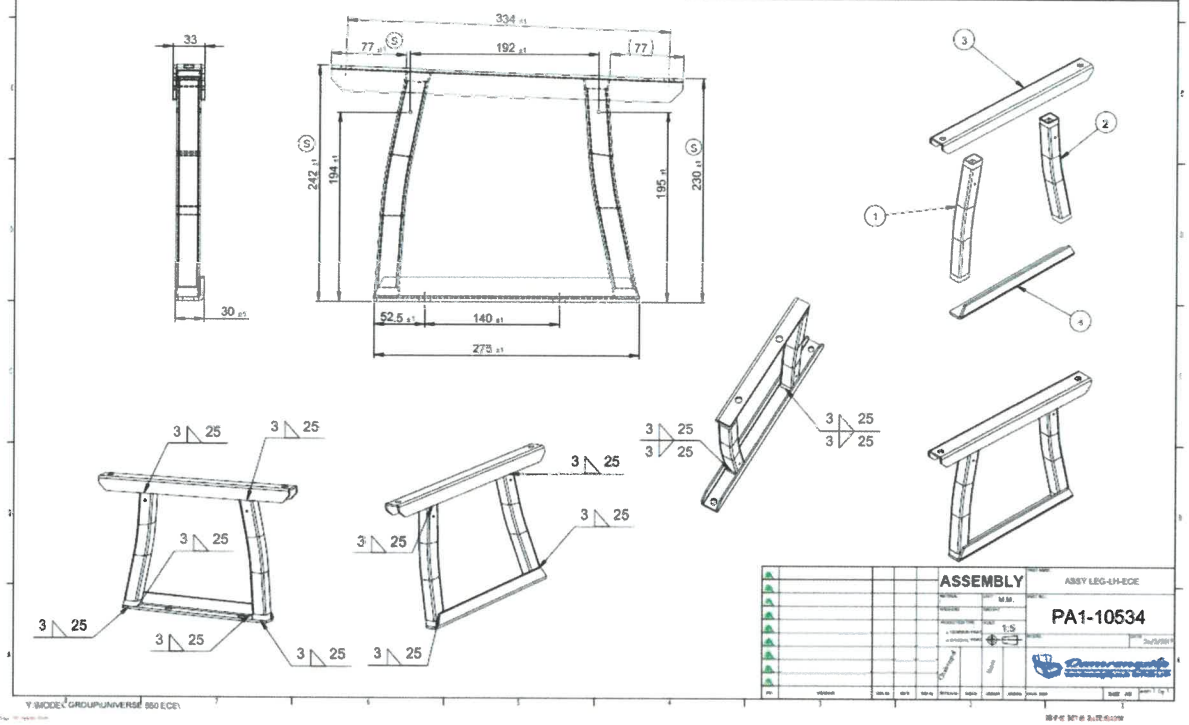

ITEM NO.	PART NUMBER	DESCRIPTION	QTY.	Material	THICKNESS
1	PI8170	SQUARE PIPE 25X25X1.5	1	SS400	1.5 mm.
2	PI8171	SQUARE PIPE 25X25X1.5	1	SS400	1.5mm.
3	PP2899	BENDING PART-L-T4	1	SPHC	3 mm.
4	PP3070	BENDING PART T4 RH	1	SPHC	4 mm.

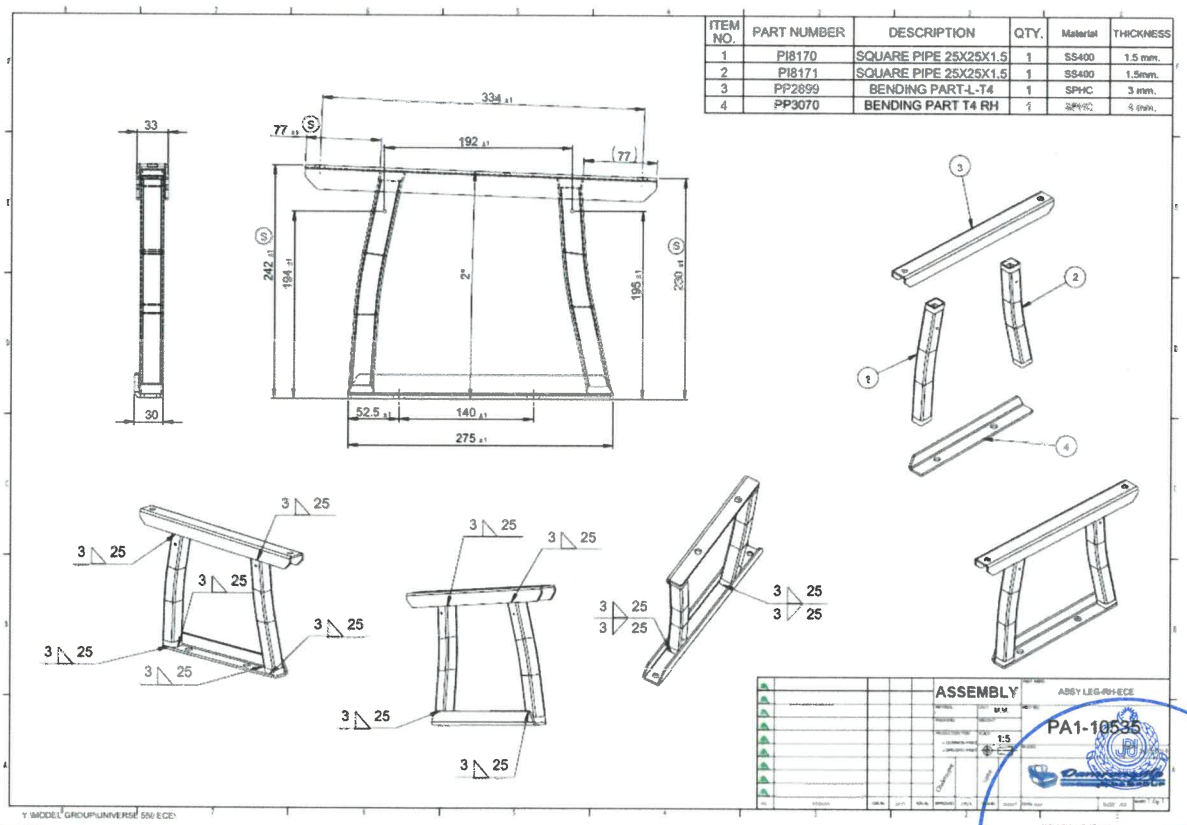

17 JUL 2012
Malaysia Approval Authority

DWG. 1d – Seat back

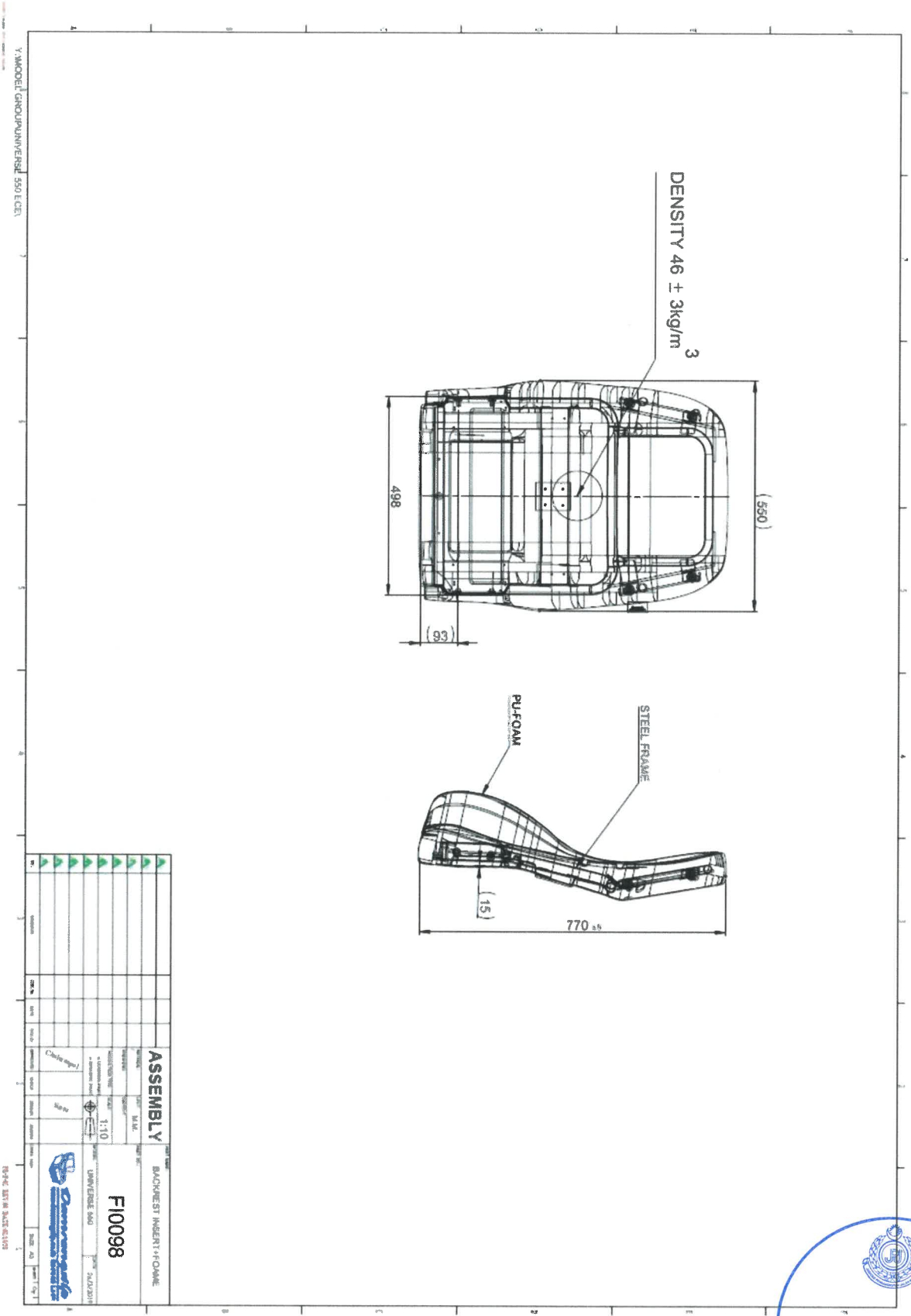

17 JUL 2019
Malaysia Approval Authority

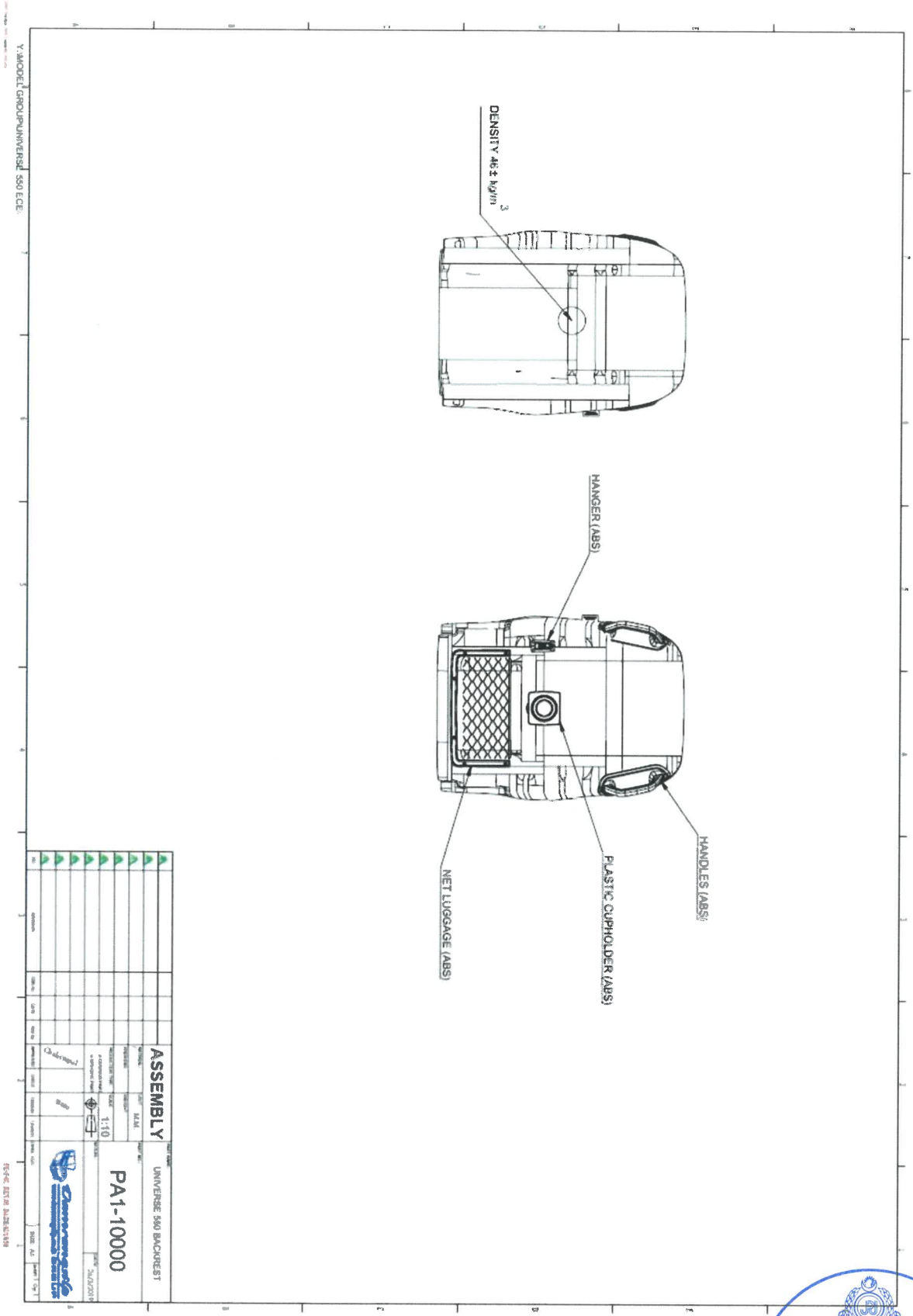

17 JUL 2019
Malaysia Approval Authority

Malaysia Approval Authority
17 JUL 2019

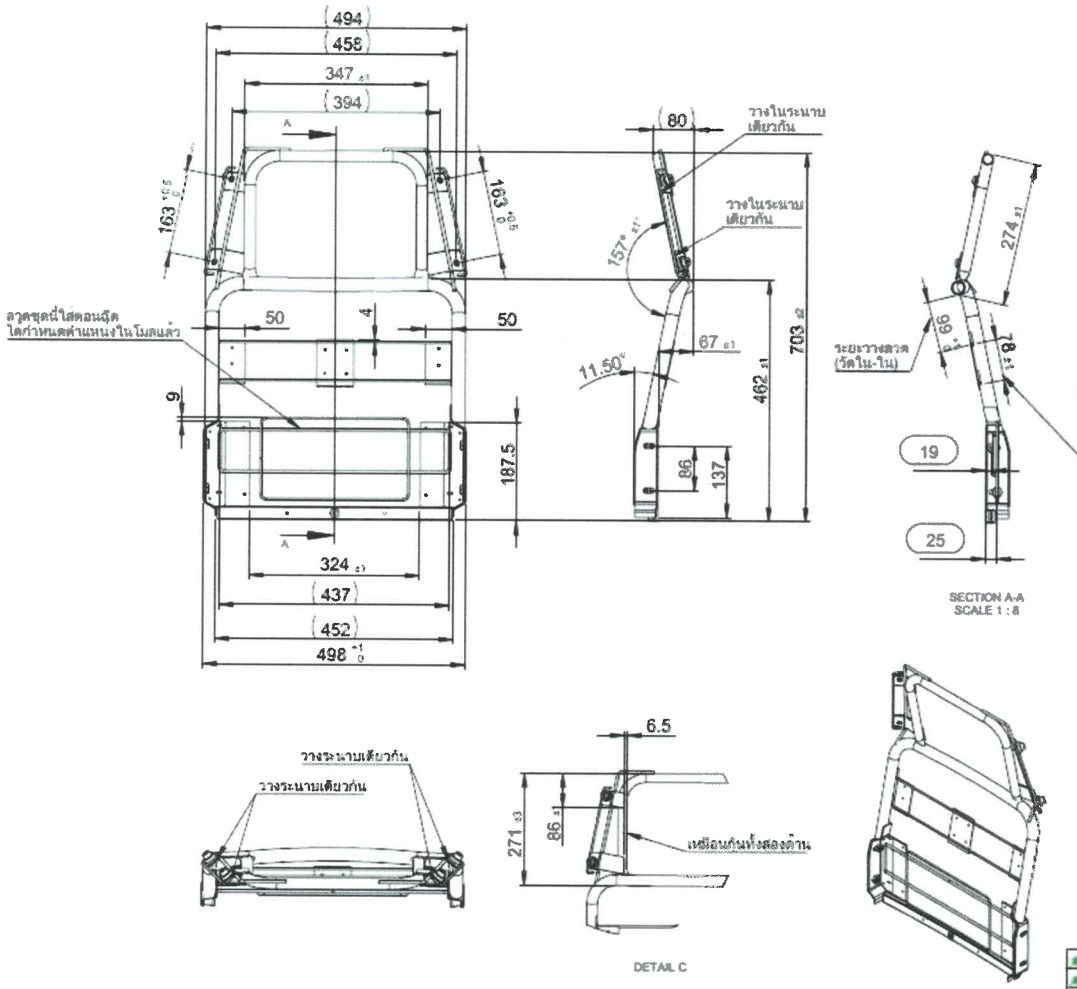

ITEM NO.	PART NUMBER	DESCRIPTION	QTY.	Material	THICKNESS
1	PA1-10324	INSERT WIRE-MOLD	1	SS400	Ø4
2	PB0566	Lathe Part OD25-L20	4	SS400	T=1.5
3	PI5939	MAINFRAME	1	SS400	T=2
4	PI5940	TOPFRAME	1	SS400	T=1.5
5	PI8226	SQUARE PIPE 25.4x12.7x1.2	1	SS400	T=1.2
6	PP1487	PUNCHING PART T3	2	SS400	T=1.5
7	PP1649	PUNCHING PART-RH	1	SS400	T=2.5
8	PP1650	PUNCHING PART- LH	1	SS400	T=2.5
9	PP2307	RH HANDLE ARM UP	1	SPHC	T=3
10	PP2308	RH HANDLE ARM LW	1	SPHC	T=3
11	PP2309	LH HANDLE ARM UP	1	SPHC	T=3
12	PP2310	LH HANDLE ARM LW	1	SPHC	T=3
13	PP2500	CUP HOLDER	1	SS400	T=1.5
14	PP2501	HOOK HOLDER	2	SS400	T=1.5
15	SW0041	Nut M10X1.5	4	SPHC	T=7.7
16	WI0886	HOR-BRKT 1	2	SS400	Ø4
17	WI0888	RH TOPBRKT 1	1	SS400	Ø6
18	WI0889	RH TOPBRKT 2	2	SS400	Ø4
19	WI0890	LH TOPBRKT 1	1	SS400	Ø6

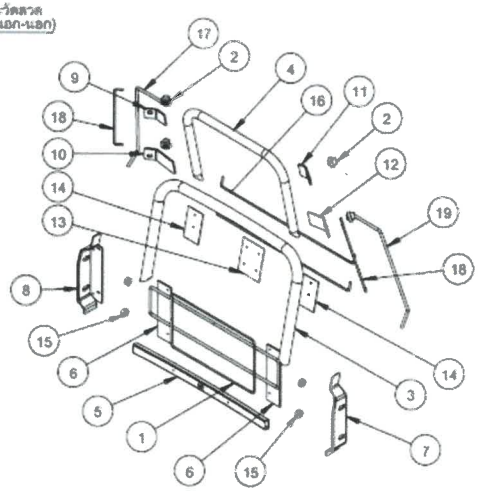

ASSEMBLY

MVP 550 BACKREST INSERT

PA1-10001

M.M.

1:10

Damanguile GROUP

SIZE A3

Y:\MODEL GROUP\UNIVERSE 550 ECE\

DWG. 1e – Seat re-inforcements

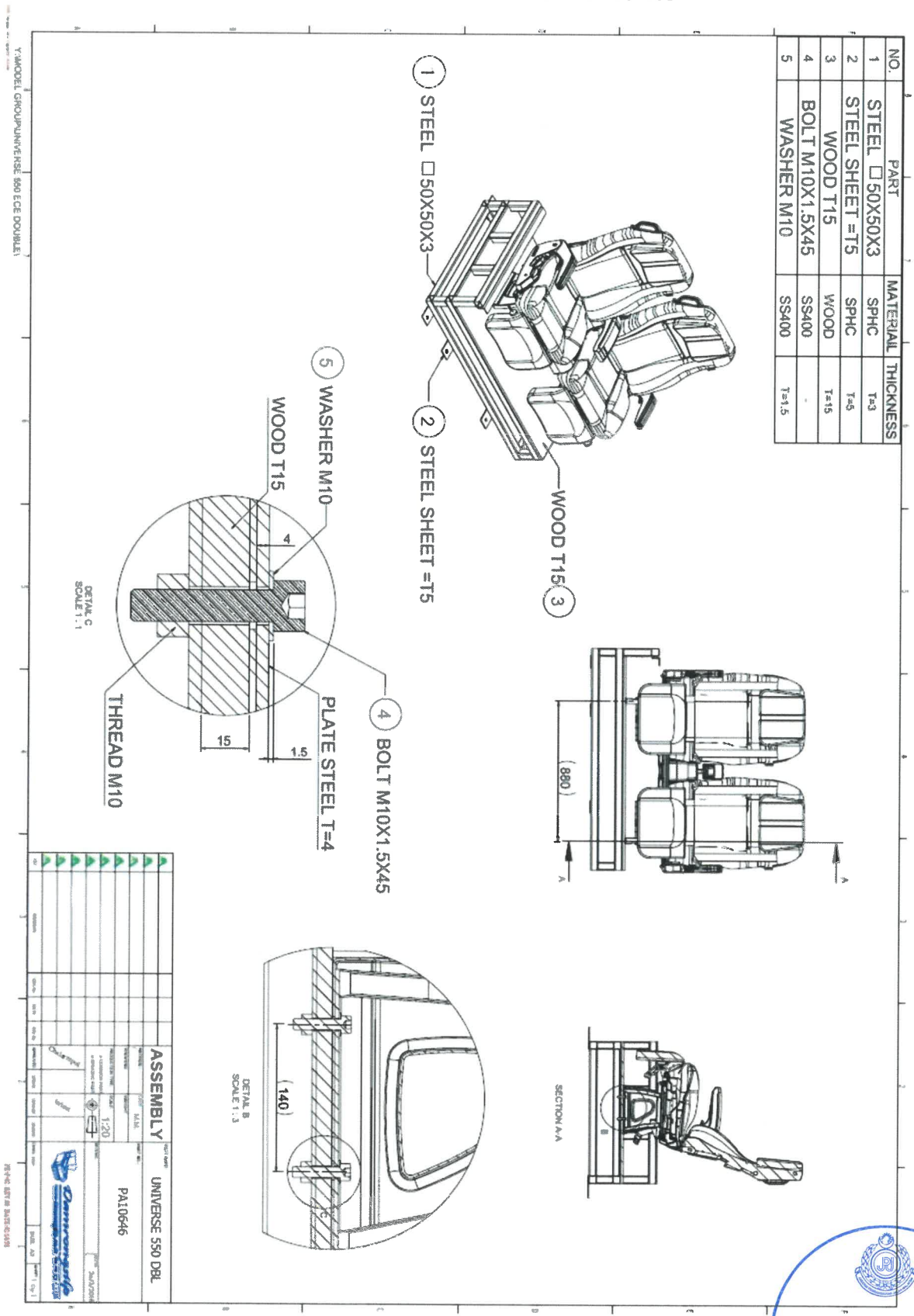

17 JUL 2017
Malaysia Approval Authority

DWG. 1g – H-Point

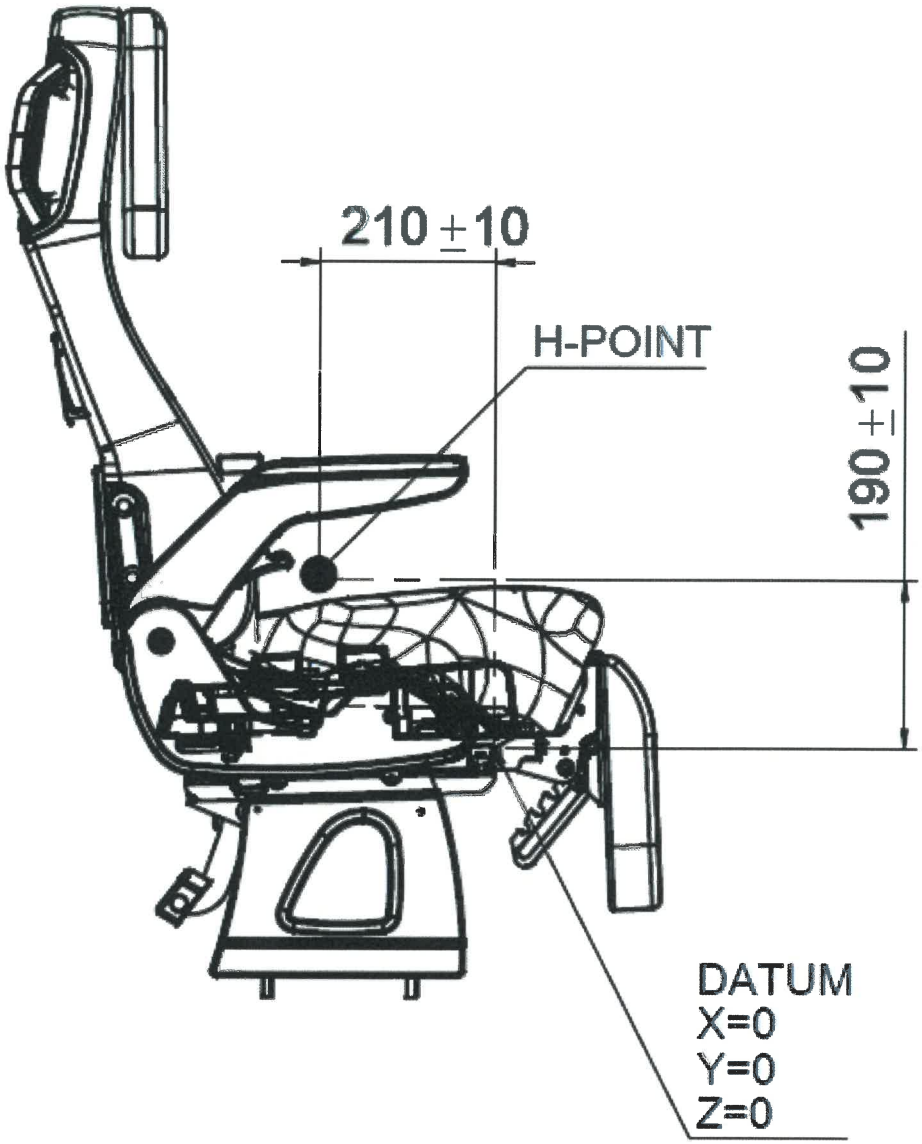

17 JUL 2012
Malaysia Approval Authority

DWG. 2 – Seatbelt Assemblies

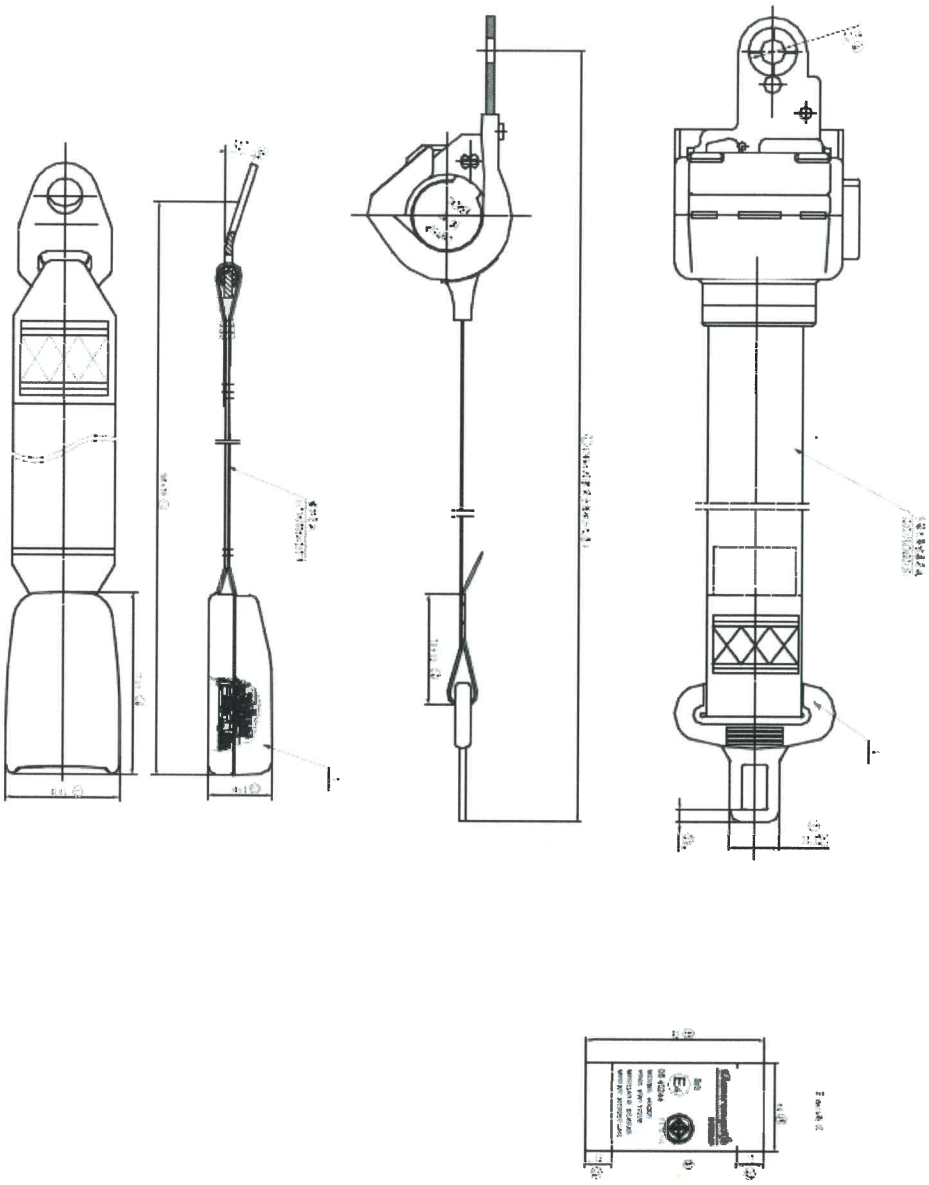

17 JUL 2012
Malaysia Approval Authority

DWG. 2 – Seat marking and E-mark Sticker location

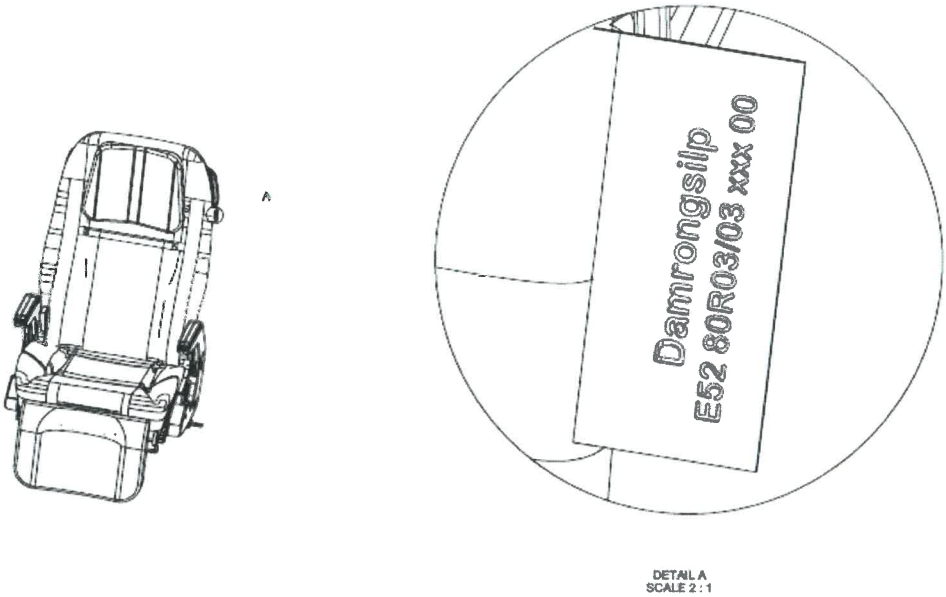

17 JUL 2019
Malaysia Approval Authority